ENERPAC
POWERFUL SOLUTIONS. GLOBAL FORCE.

▼ Shown: **BP-122E**

Portable Cordless Power Anywhere

- **Lightweight, compact design with integrated handle for maximum portability**
- **Dual power selection and variable speed for preferred flow and precise control**
- **With manual 3/2 valve (advance/retract) for use with single-acting cylinders and tools**
- **Heavy-duty 28 volt Lithium-Ion battery pack delivers constant fade-free power**
- **Immediate charging after use — a quick one hour charge**
- **Pump model includes two 3,0 Ampères-hour battery packs and quick charger.**

▼ *Take the battery pump anywhere without any power cords or air hoses.*

28-Volt Lithium-Ion Battery

Heavy-duty construction with easy to operate latches. Fuel gauge LEDs show remaining charge.

Number of illuminated LEDs	Charge Remaining
4 ■ ■ ■ ■	100%-78%
3 ■ ■ ■	77%-56%
2 ■ ■	55%-34%
1 ■	33%-10%
Flashing	less than 10%

G2535L Gauge

Minimize the risk of overloading and ensure long dependable service from your cordless pump.

Page: 128

Hoses

To ensure the integrity of your system, specify only genuine Enerpac hydraulic hoses.

Page: 120

Help Keep Our Environment Clean

Battery packs contain no cadmium. Enerpac encourages recycling.

Battery Powered Pump

The BP-series cordless pump is best suited for small to medium size cylinders or hydraulic tools, or wherever portable cordless hydraulic power is needed.

Powerful for everyday use, its lightweight and ergonomic design are ideal for both, remote job sites or wherever a cord gets in the way.

The Lithium-Ion battery operates at peak performance under extreme conditions to get more work completed. The battery pack provides the power to run the cordless pump at maximum pressure for over six minutes.

Numerous applications are easily and safely performed using the cordless pump powered by the Lithium-Ion battery pack.*

- 130 cuts of 9,5 mm (3/8 inch) reinforcing bar using the WHC-750 cutter
- 75 lifts with a WR-5 spreader
- Safely remove thirty M24 nuts using the NC-3241 nut splitter
- Lift loads multiple times using 5 to 100 ton jacks.

* Actual number of cycles will depend on condition of tool, battery, and ambient conditions.

BP Series

Reservoir Capacity:
1,9 - 3,8 litres

Flow at Rated Pressure:
0,25 l/min

Maximum Operating Pressure:
700 bar

FLOW CHART

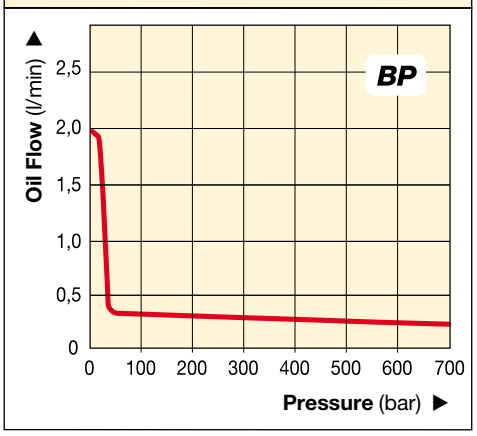

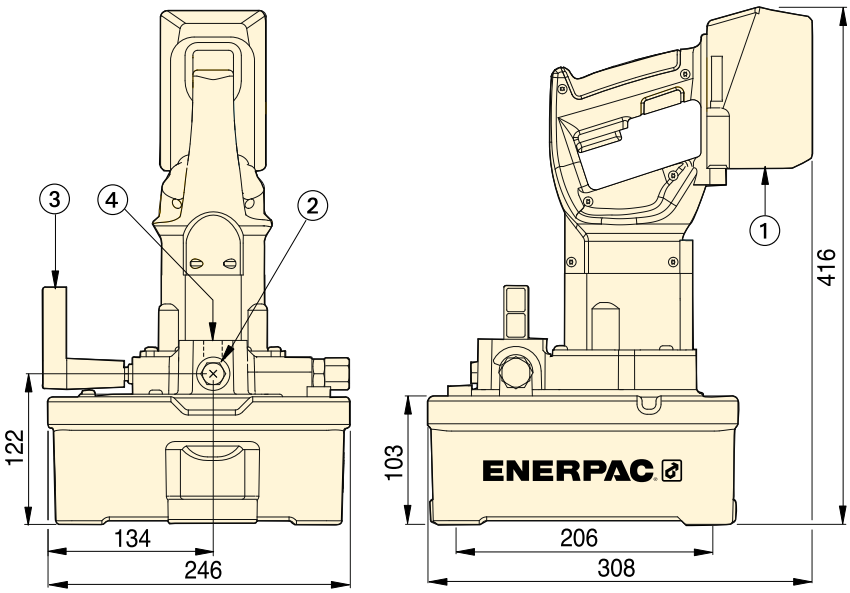

① 28-Volt Lithium-Ion battery
② 3/8"-18 NPTF oil outlet
③ 3-way, 2-position valve
④ ¼"-18 NPTF gauge port

▼ *Cordless power and simplicity for the toughest jobs: BP-122E battery pump used to operate an RCS-1002 low height cylinder. After lifting the load is mechanically supported by LPC-Series Cribbing Blocks.*

▼ SELECTION CHART

Pump Type (used with cylinder or tool)	Usable Oil Capacity (litres)	Model Number	Output Flow Rate (l/min) 14 bar	Output Flow Rate (l/min) 700 bar	Valve Type	Charger Voltage (VAC)	(kg)
Single-Acting	1,9	**BP-122E**	1,9	0,25	3/2	230	9,6
	3,8	**BP-124E**	1,9	0,25	3/2	230	10,9
	1,9	**BP-122**	1,9	0,25	3/2	115	9,6
	3,8	**BP-124**	1,9	0,25	3/2	115	10,9

Sound level: 95 dBA at 3000 RPM.